Rozmery v mm
Maße in mm
Dimensions in mm

H3LE RAM11
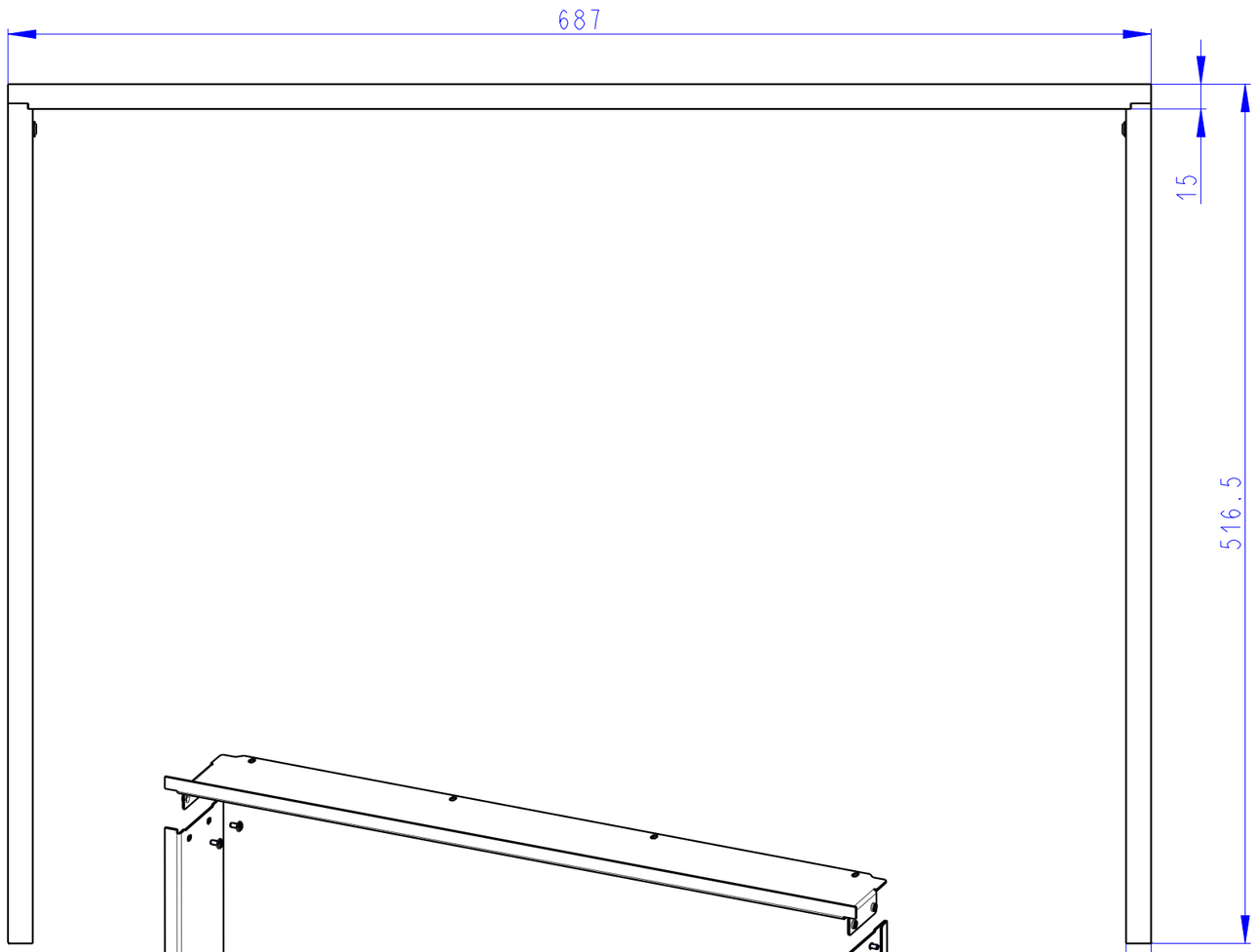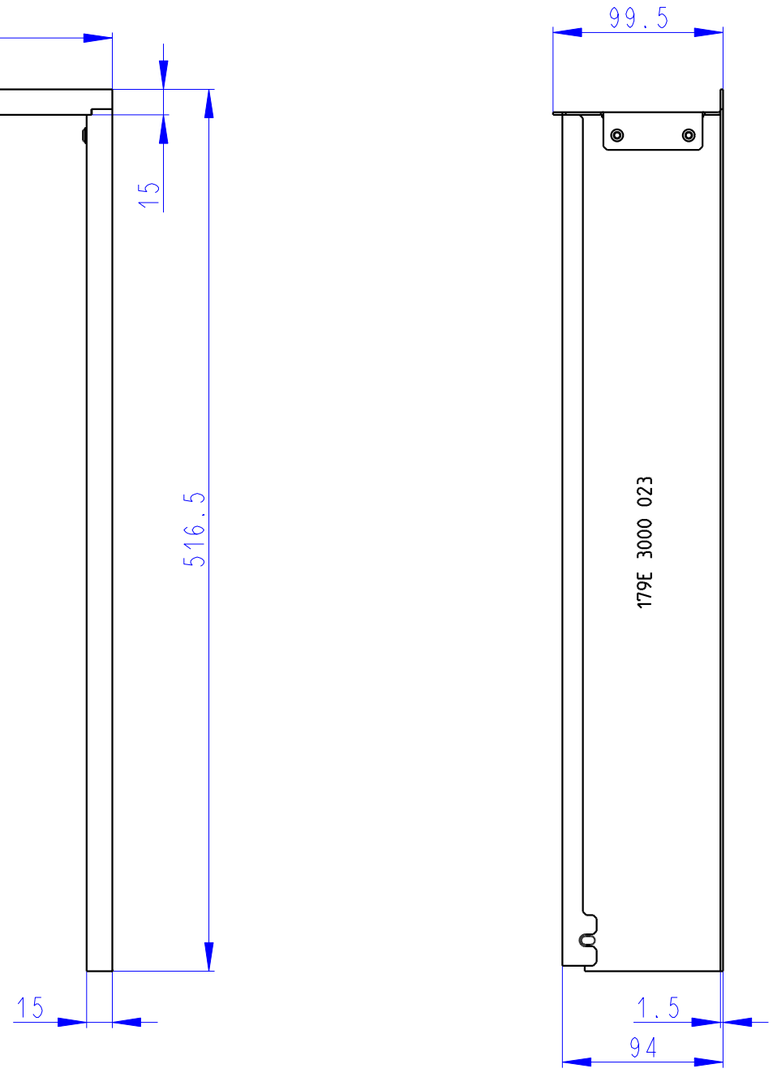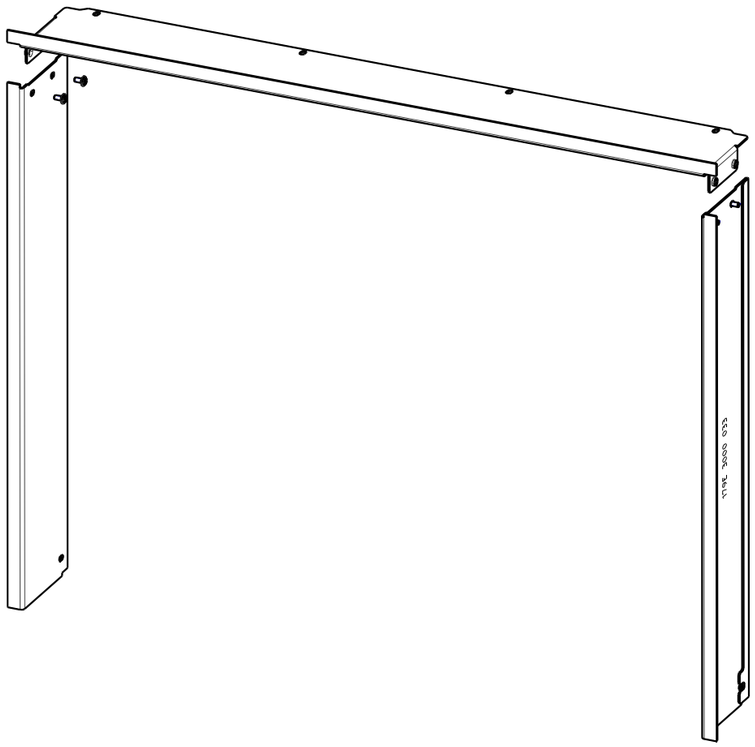
2,5kg